K-PAC

PLUM CREEK ENVIRONMENTAL

STATIONARY COMPACTORS

Features:

- Designed for Commercial and Industrial Applications
- Typically used for Dry Waste applications
- Allen Bradley PLC Controller
- Full Line of Stationary Compactors from 2 to 6 Cu Yd
- Compatible with most 40 Cu Yd Receiving Containers

3-2-1 WARRANTY

3 Years Structure 2 Years Parts 1 Year Labor

K-PAC
PLUM CREEK ENVIRONMENTAL

STATIONARY COMPACTORS

	KP-2ST (2YD)	KP-3ST (3YD)	KP-4ST (4YD)
Basic Size (Cu Yd)	1.44	2.45	2.97
A - Length (in)	120″	174″	174″
B - Deck Height (in)	48″	48″	54″
C - Width (in)	72 ½″	72 ½″	72 ½″
D - Clear Top Opening L x W	41″ x 58″	58″ x 68″	58″ x 68″
E - Ram Face - W x H	60″ x 28″	60″ x 28″	60″ x 34″
Ram Penetration	13″	13″	13″
Normal Force (lbs)	50,900	50,900	50,900
Normal Pressure (psi)	1,800	1,800	1,800
Maximum Force (lbs)	56,500	56,500	56,500
Maximum Pressure (psi)	2,000	2,000	2,000
Cycle Time (sec)	60	51	51
Motor (HP)	10	15	15
Pump (GPM)	12	18 ½	18 ½
Cylinder Bore (in)	6″	6″	6″
Cylinder Size Rod (in)	2 ½″	4″	4″
Cylinder Stroke (in)	54″	82″	82″

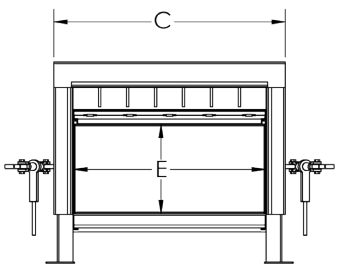

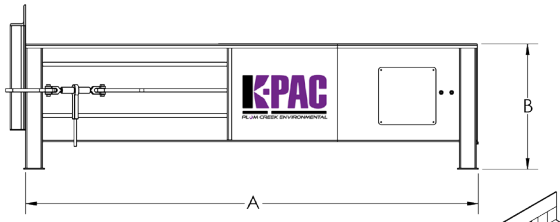

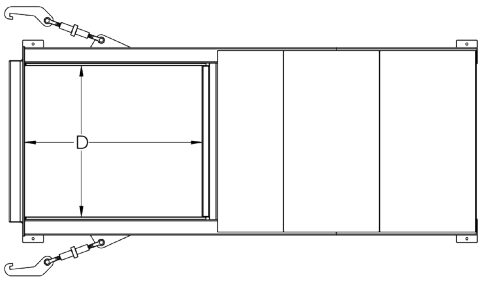

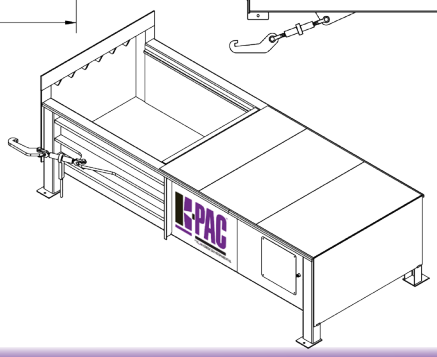

National Waste & Recycling Association
Collect. Recycle. Innovate.

c UL us LISTED

Houston-Galveston Area Council

GSA

K-PAC by PLUM CREEK
239 Walton Rd, Seabrook, NH 03874
1302 East Industrial Access Rd West Point, MS 39773 | 662-327-4183 | plumcreeket.com

K-PAC
PLUM CREEK ENVIRONMENTAL

STATIONARY COMPACTORS

	KP-2STHD (2YD)	KP-3STHD (3YD)	KP-4STHD (4YD)
Basic Size (Cu Yd)	1.48	2.45	2.97
A - Length (in)	120″	174″	174″
B - Deck Height (in)	48″	48″	54″
C - Width (in)	72 ½″	72 ½″	72 ½″
D - Clear Top Opening L x W	41″ x 58″	68″ x 58″	68″ x 58″
E - Ram Face - W x H	60″ x 28″	60″ x 28″	60″ x 34″
Ram Penetration	13″	13″	13″
Normal Force (lbs)	69,250	69,250	50,900
Normal Pressure (psi)	1,800	1,800	1,800
Maximum Force (lbs)	77,000	77,000	56,500
Maximum Pressure (psi)	2,000	2,000	2,000
Cycle Time (sec)	78	74	51
Motor (HP)	10	15	15
Pump (GPM)	12	18 ½	18 ½
Cylinder Bore (in)	7″	7″	6″
Cylinder Size Rod (in)	4″	4″	4″
Cylinder Stroke (in)	56″	82″	82″

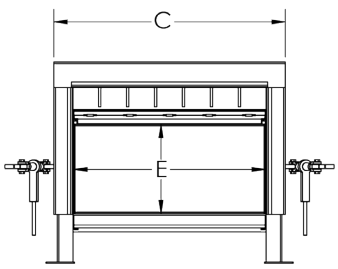

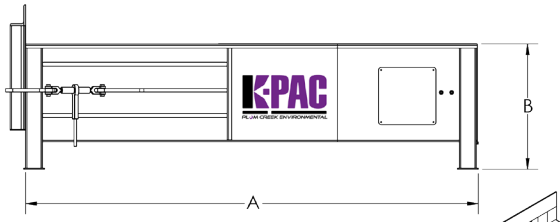

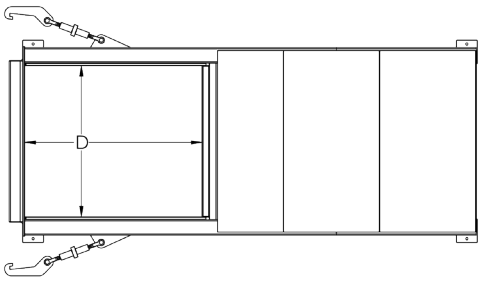

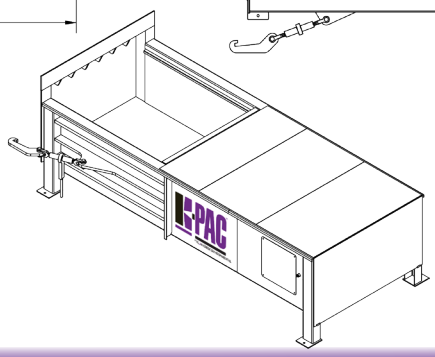

National Waste & Recycling Association
Collect. Recycle. Innovate.

c UL us LISTED

Houston-Galveston Area Council

GSA

K-PAC by PLUM CREEK
239 Walton Rd, Seabrook, NH 03874
1302 East Industrial Access Rd West Point, MS 39773 | 662-327-4183 | plumcreeket.com

K-PAC
PLUM CREEK ENVIRONMENTAL

STATIONARY COMPACTORS

	KP-5ST (5YD)	KP-5STHD (5YD)	KP-6ST (6YD)	KP-6STHD (6YD)
Basic Size (Cu Yd)	3.46	3.46	4.20	4.20
A - Length (in)	236 ½″	236 ½″	236 ½″	236 ½″
B - Deck Height (in)	48″	48″	54″	54″
C - Width (in)	72 ½″	72 ½″	72 ½″	72 ½″
D - Clear Top Opening L x W (in)	96″ x 58″	96″ x 58″	96″ x 58″	96″ x 58″
Ram Penetration (in)	13″	13″	13″	13″
Normal Force (lbs)	50,900	69,250	50,900	69,250
Normal Pressure (psi)	1,800	1,800	1,800	1,800
Maximum Force (lbs)	56,500	77,000	56,500	77,000
Maximum Pressure (psi)	2,000	2,000	2,000	2,000
Ram Face Width (in)	60″	60″	60″	60″
Ram Face Height (in)	28″	28″	34″	34″
Cycle Time (sec)	35	51	35	51
Motor (HP)	20	20	20	20
Pump (GPM)	36	36	36	36
Cylinder Bore (in)	6″	7″	6″	7″
Cylinder Size Rod (in)	4″	4″	4″	4″
Cylinder Stroke (in)	110″	110″	110″	110″

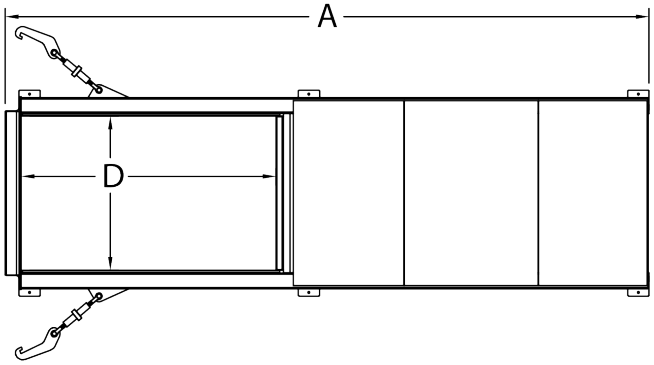

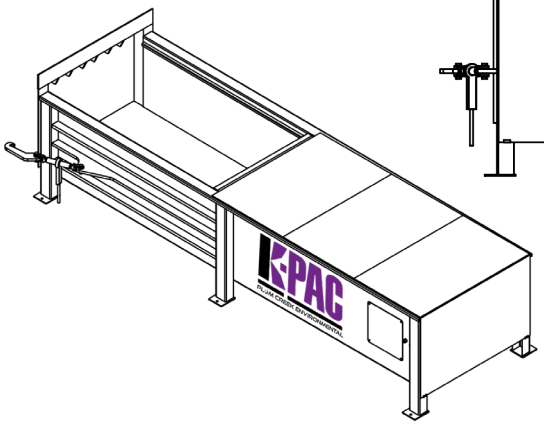

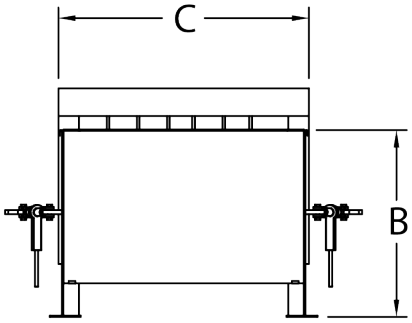

National Waste & Recycling Association
Collect. Recycle. Innovate.

c UL us LISTED

Houston-Galveston Area Council

GSA

K-PAC by PLUM CREEK
239 Walton Rd, Seabrook, NH 03874
1302 East Industrial Access Rd West Point, MS 39773 | 662-327-4183 | plumcreeket.com